THIS DOCUMENT IS THE PROPERTY OF SELECT CONTROLS INCORPORATED AND IS CONVEYED WITH THE EXPRESS CONDITION THAT IT AND THE INFORMATION CONTAINED IN IT ARE NOT TO BE USED, DISCLOSED, OR REPRODUCED IN WHOLE OR IN PART, FOR ANY PURPOSE WITHOUT THE EXPRESS WRITTEN CONSENT OF SELECT CONTROLS INCORPORATED; AND THAT NO RIGHT IS GRANTED TO DISCLOSE OR SO USE ANY INFORMATION CONTAINED IN SAID DOCUMENT.

2069-1-000

REVISIONS				
ALT	DESCRIPTION	BY	CHK	ENG

NOTE:

1. SWITCHES (6): UNIDIRECTIONAL, NORMALLY OPEN, AUTOMATICALLY RESETTABLE
2. WEIGHT: TBD
3. CONTACTS: SPST, NORMALLY OPEN
4. CONTACT RESISTANCE: 50 OHMS MAXIMUM
5. CONTACT RATING: 50MA AT 12VDC
6. INSULATION RESISTANCE: 30 MEGOHMS MINIMUM AT 500VDC
7. OPERATING CHARACTERISTICS:
   CONTACT CLOSURE @ 2.0-2.5 G'S IN EITHER THE X-X,Y-Y OR Z-Z AXIS.
8. TEMPERATURE RANGE:
   a) OPERATING: -40°C TO +150°C
   b) NON-OPERATING: -54°C TO +200°C
9. SWITCH SEAL: HERMETIC

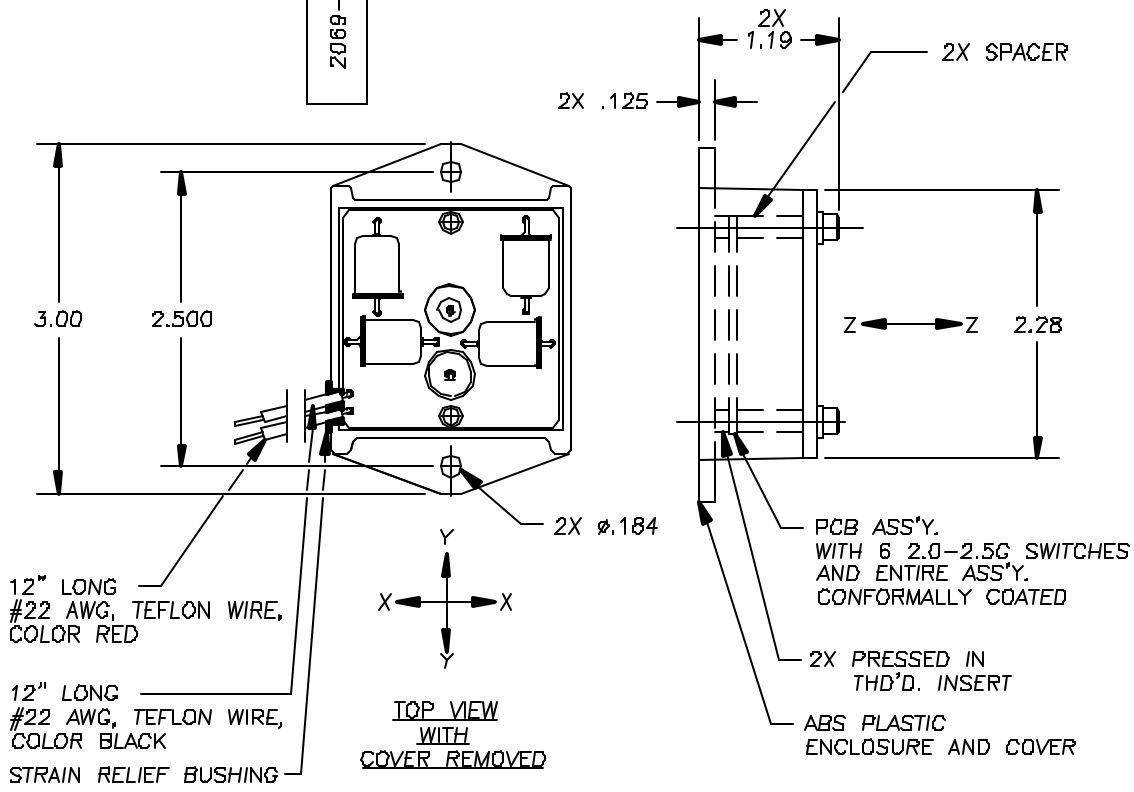

ITEM NO.	NO. REQ'D	PART NO.	DESCRIPTION	REMARKS

BILL OF MATERIAL

MATERIAL

FINISH

TITLE "G" SWITCH ASSEMBLY, POWER CUT-OFF

Select Controls Inc.
45-3 KNICKERBOCKER AVE.
BOHEMIA, N.Y. 11716

DO NOT SCALE DRAWING
REMOVE BURRS & BREAK SHARP EDGES
TOLERANCE UNLESS SPECIFIED:
FRACT: ±1/64 ANGLE ±0°30'
MACH FINISH: 125 DEC: .05 ±.010
RMS DECM: .000 ±.005

NO. REQ'D	N/A	NO. REQ'D	N/A	SCALE: 1:1

WEIGHT:

DRAWN AHN 10/15/08
CHECKED
ENGINEER
APPROVED
APPROVED DATE

DRAWING NO. 2069-1-000 REV

SHEET 1 OF 1